Stirling engines
A technology overview

Author: Camille Bachelier
MSc Student, Sustainable energy engineering program
Royal Institute of Technology
Stockholm, Sweden

Supervisor: Jim Gaston
Smarthome program director
Duke University
Durham, North Carolina

Research paper
July 2009

Pratt School of engineering, Smarthome program
Duke University
Durham, North Carolina

Department of Energy Technology
Royal Institute of Technology
Stockholm, Sweden

TABLE OF CONTENTS

INDEX OF TABLES

INDEX OF FIGURES

NOMENCLATURE

CSP	Concentrated solar power
FPSE	Free piston Stirling engine
I.C. engine	Internal combustion engine
Micro CHP	Micro combined heat and power
We	Watt of electric energy
Wth	Watt of thermal energy

1 INTRODUCTION

In a global context where the concerns for energy resources and pollution are getting more and more importance, new technical solutions have to be developed to propose alternatives to existing systems in a more efficient and less polluting way. Developing new technical solutions does not mean that one has to invent totally new technologies. Sometime some technologies developed as long as several centuries ago can be rediscovered and used to deal with today's issues.

Stirling engine technology is one of these technologies which have been developed long ago but did not find their way through the competition with other technologies to provide a solution to a particular problem. Because of the new issues the World has to face, this kind of technology is worth investigating again.

The aim of this report is to give an overview of this technology as general as possible in order understand the technology and its development better. Thus in a first time, the History of Stirling engines is presented. Then the basics about this technology are described. After that some more practical information on the different mechanical designs of such engines are listed. Finally today market and main manufacturer are presented in order to show what today situation is for Stirling engine

2 HISTORY

In this part, a brief history of Stirling engines is presented, which helps to understand the motivation of the choice of this technology and the major steps of the development of the technology. It also presents to which kind of applications, this engine was dedicated in different periods of time. First the original idea of 1816 is presented, then the development period following this first idea from 1816 to 1910's is described along with the reason why it was almost forgotten for a while. After that the reasons for the new interest for Stirling engine in the 1940's-1970's period are presented along with the reasons for the 2nd decline of the idea. Finally motivations for modern development since the end of 1980's are presented.

2.1 Initial concept and first patent

The Industrial Revolution at the end of the 18th century was enabled by the development of new ways to generate power in order to use machines to do work which was formerly done by humans or animals. In this context, several ways to generate power have been investigated in order to improve the energy efficiency of these new systems. This context was therefore particularly favorable to the invention of a variety of technologies, some of them being still used today. At this time, most of the technologies were based on the heating of a working fluid to generate mechanical power. One of the first technologies investigated was the steam engines which led to the invention of the Locomotive for example. But in the search for more practical and efficient systems, some other technologies have been invented, using different process or different fluids for example.

It is in this context that appeared the concept of hot air engines which have been investigated as early as 1699 according to literature (see Stirling engine society of the USA). This kind of engine generated mechanical power by expanding air by means of heating either in closed or open cycle from a thermodynamic point of view. One of the major developments of this kind of engine was done in 1807 by Sir Georges Caley. The development of this kind of engine surely inspired Robert Stirling for the design of his engine which was granted the patent #4081 in 1816 (B. Kongtragool, S. Womgwises, 2002). The innovative part of R. Stirling engine was the use of a “heat economizer” or “regenerator” which allows improving the engine efficiency. Therefore according to literature, the name “Stirling engine” should refer exclusively to closed-cycle regenerative gas engines (MIT website on Stirling engine). Thus in this kind of engine the media does not change of phase (as in steam engines) nor leave the engine border (as in internal combustion engines) and part of the heat provided over a cycle is recovered by the regenerator. The first design of the Stirling engine was a Beta design (T. Finkelstein, A. J. Organ, 2001) also known as “displacer configuration”.

2.2 First development period (1816 – 1910's)

After this patent and until 1850's, Robert Stirling and his brother James started to develop the first industrial commercialization of the Stirling engine. In parallel, numerous other inventors and engineers developed other designs of Stirling engines for different applications until the beginning of 1910's. In 1827, Stirling brothers brought some modification to their original design in order to simplify mechanical design of the engine. From this appeared the Gamma design around 1827 (T. Finkelstein, A. J. Organ, 2001) with the advantages and disadvantages it induces.

Around 1860, a new design involving 4 interconnected double acting pistons was created in order to improve global engine efficiency with existing material and mechanical knowledge (J. R. Senft, 1993). In 1872, and in the research for new energy sources, a first “solar Stirling” system has been designed by John Ericsson, known for the various engine design he has invented (T. Finkelstein, A. J. Organ, 2001). The third main Stirling engine design, the Alpha design, was invented in 1876 by A. K. Rider, which proposed a simpler mechanical design with less efficiency losses compared to a gamma design.

The last major development of this period will come in 1905 with the invention of the Ringbom engine which proposes a simpler and more efficient mechanical design from Gamma or Beta designs (J. R. Senft, 1993). Again, this design can be seen as a precursor for another design which will come several years later: the free piston Stirling engine (FPSE). All over this period, some developments were made on more specific parts of the engine, and some industrial applications have been created, for marine propulsion or power generation for example. But the invention and development of internal combustion engines which at this time proposed better efficiency and specific power displaced the interest in further development of Stirling engine after the 1910's.

2.3 Second development period (1940's – 1970's)

One has to wait until the end of 1930's to find new serious development of Stirling engine. The Philips Company wanted a relatively portable energy source for radio stations, which would not need batteries. Regarding the progress made in material and mechanical sciences, the Stirling engine was an interesting option and was chosen for investigations. This choice was also motivated by the fact that before 1st world war, Stirling engine efficiency was still far from the theoretical ideal efficiency (Carnot), progress possibilities were therefore very attractive (T. Finkelstein, A. J. Organ, 2001). Thus during the 1940's to 1970's period, Philips have been one of the major actor of Stirling engine development. Some other companies and organizations have worked on the development of Stirling engines during this period, independently or from Philips earlier designs. Among them one can find the NASA, or United Stirling AB (a Swedish company renamed Kockums AB since, still existing today).

Different applications have been investigated, from power generation to transport motorization. Even though only few totally new concepts have been found, the bases of modern Stirling engine have been developed during this period. One of the most important new concepts of this period is the Free Piston Stirling Engine (FPSE), invented by William Beale working in Ohio University in 1964. Some other new concepts, more or less similar to existing concept, were also found during this period, such as the “Fluydine” designed by C. West, which is a Stirling engine entirely based on fluid pistons (alpha design usually) or the low temperature Stirling engine designed by Bradley (based on Gamma design usually) (T. Finkelstein, A. J. Organ, 2001).

In the end of this period, Philips development of Stirling engines were concentrated on the development of engines for transportation applications, especially for cars. After having designed and tested with success a Stirling engine fitted in a Ford Gran Torino in 1978, Philips stopped the development of Stirling engines because of the drawbacks it induced compared to I.C. engines (difficulties to operate at variable load, lower specific power,...). However, Philips licensed one of its senior engineer, R. J. Meijer, to create his own company, Stirling Thermal Motors (shut down in 2007 and bought and rename Stirling Biopower the same year), to continue development of Stirling engines (T. Finkelstein, A. J. Organ, 2001). Since Philips was the main company to develop Stirling engines at industrial scale for commercial purpose, the abandonment by Philips of Stirling engine development marked the beginning of a period during which no commercial development of Stirling engine has been done and which last until around the end of the 1980's.

2.4 Modern development (since end of 1980's)

The new energy context arising by the end of the 1980's, after the 2 oil crises, the perspective of energy resource short supply, the increasing awareness of environmental concerns along with the availability of new materials, mechanical knowledge and design and modeling methods (computer assisted simulation and analysis), made the study of Stirling engine interesting again for commercial applications, especially in power generation. Since the end of the previous development period the development of Stirling engine was made mainly by universities or research organizations, the few more practical studies being done for very specific applications, such as new silent submarine drives for example (see Kockums AB website). Power generation applications are now one of the most important commercial applications of Stirling engines, justifying further development. For example, 2 main applications appeared which are, CHP (production of electricity and heat at small and medium scale) and solar thermal power production (conversion of solar thermal power into electricity or mechanical power). To get a better overview of recent development of Stirling engine on commercial level, see the part of this report dedicated to the actual manufacturers and market.

2.5 Summary

The following chart sums up the major steps of Stirling engine development

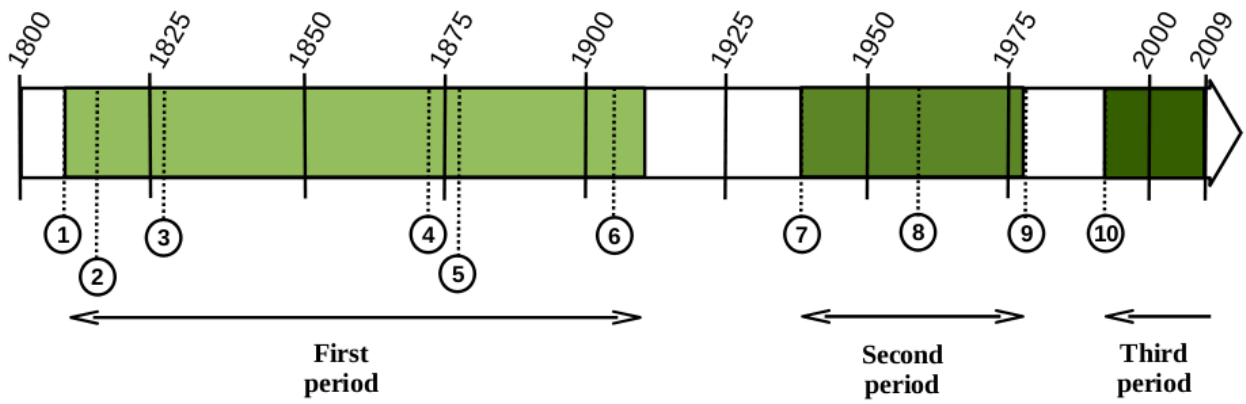

1- 1807: Sir G. Caley Hot air engine
2- 1816: R. Stirling closed regenerative cycle gas engine patent (Beta design)
3- 1827: Stirling brothers Gamma design
4- 1872: First solar-Stirling system by J. Ericsson
5- 1876: Alpha design by A. K. Rider
6- 1905: Ringbom design
7- 1938: Philips new interest for Stirling engines
8- 1964: W. Beale Free Piston Stirling engine
9- 1978: End of Philips development of Stirling engines
10- Beginning of 1990's: New interest in Stirling engine

Figure 2.1: Stirling engine development timeline

For more detailed information on History of Stirling engine and hot air engine in general, the reader can look at Robert Sier book (Robert Sier, 2000) and Theodore Finkelstein and Alan J. Organ book (T. Finkelstein, A. J. Organ, 2001) on Stirling engines History.

3 FUNDAMENTALS

This part gives an overview of Stirling engine theory. The working principle is detailed in a first part, then a simple ideal model is presented and after that a more detailed analysis of Stirling engines, the Schmidt analysis is presented. Finally a list of advantages and disadvantages of Stirling engines is described, with some comparison to usual I.C. engines.

3.1 Working principle and simple thermodynamic model

In order to better understand the Stirling engine working principle, it is interesting in a first time to have a look at the ideal thermodynamic cycle. The following figures represent the Clapeyron Diagram (Pressure-Volume) and the temperature-entropy diagram of this cycle

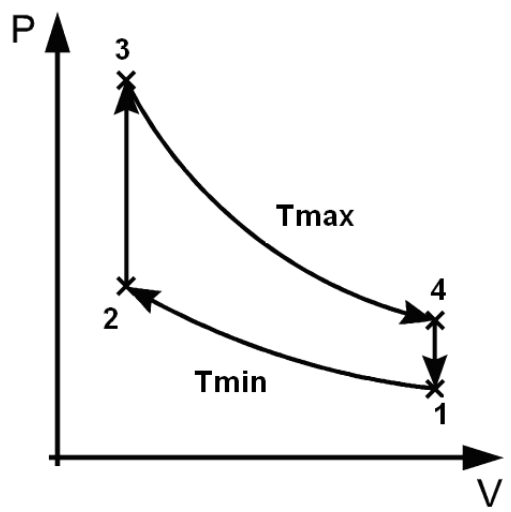

Figure 3.1: Stirling cycle Clapeyron diagram

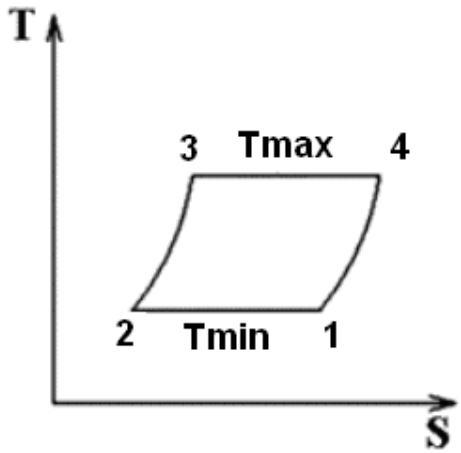

Figure 3.2: Stirling cycle Temperature-entropy diagram

This ideal thermodynamic cycle can be described as follow (G. Walker, 1973):

- Step 1 to 2: Isothermal compression. The working gas is compressed, the volume decreases and the pressure increases, the temperature remaining constant. Heat is transferred from the gas to the surroundings.
- Step 2 to 3: Isochoric heat transfer. The working gas is heated up from the cold source temperature to hot source temperature, at constant volume, which leads to an increase in the working gas pressure.
- Step 3 to 4: isothermal expansion. The temperature remaining constant, the gas expands, increasing its volume and thus decreasing its pressure. Heat is transferred from the heat source to the gas.
- Step 4 to 1: isochoric heat transfer. The gas temperature decreases from the hot source temperature to the cold source temperature, at constant volume, which leads to pressure decrease.

In a more practical way, different designs of Stirling engine exist, which follows all the same basic cycle presented before. As can be seen in following figure, which corresponds to a particular design (alpha design, see the part on the different Stirling engine designs for more details), a Stirling engine can be modeled by the combination of compression (cooling) and expansion (heating) spaces and a regenerator which is a device, usually a metal mesh, used to recover passively heat during the cycle.

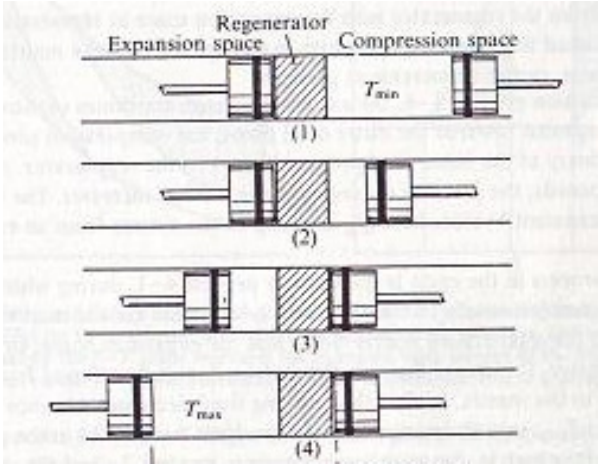

Figure 3.3: Simple mechanical model of main steps of Stirling cycle (from G. Walker 1973)

According to this simple mechanical design, here is a more practical description of the main steps of the Stirling cycle. During this ideal cycle the gas in compression space is assumed to be at constant temperature Tmin and the gas in expansion space is assumed to remain at constant temperature Tmax:

- Step 1: All the working fluid is in the compression (cooling) space at the beginning of this stage. The global volume of working fluid is at its maximum so that pressure and temperature are at their minimum values.
- Step 1 to step 2: the compression space piston is moving (powered by the inertia of a flywheel for example), the expansion space piston not moving, the fluid is compressed and temperature remains constant (Tmin), thus heat is transferred from the gas to the surrounding. Mechanical work is needed during this stage.
- Step 2: at this step the expansion space piston will start moving at the with the compression space piston, gas is still at temperature Tmin.
- Step 2 to 3: The 2 pistons move, heat is transferred from the regenerator to the gas as the gas moves from the compression to expansion space. Since both pistons move simultaneously, the global gas volume remains constant. The gas heats up from Tmin to Tmax. This temperature rise at constant volume causes the pressure to increase.
- Step 3: The compression piston is at its dead end position. All gas is in expansion space at Tmax temperature.
- Step 3 to 4: The increased pressure pushes the expansion piston, expanding the working gas volume. The pressure thus decreases. The heat source supply heat to the working gas, keeping its temperature constant at Tmax. Mechanical work is generated during this stage.
- Step 4: Expansion piston has reached its outer end, all the gas is in expansion space, at Tmax temperature.
- Step 4 to 1: both pistons move simultaneously again, keeping the volume constant and moving the gas from the expansion to the compression space. The gas gives heat to the regenerator (which will be given back during the step 2 to 3 stage). Gas cools down from Tmax to Tmin, causing the pressure to decrease.

Following figure shows the theoretical position of the 2 pistons, according to the cycle described previously.

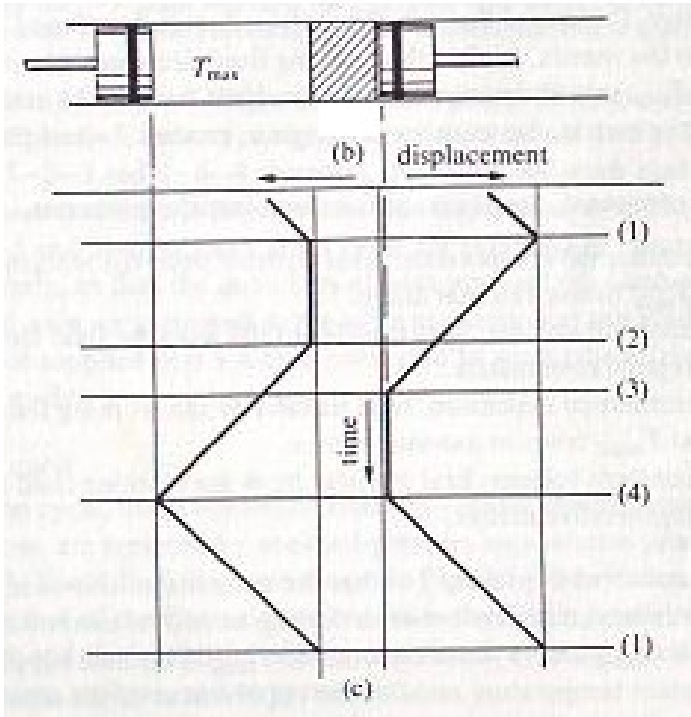

Figure 3.4: Pistons position during Stirling cycle (from G. Walker 1973)

From this diagram, it can be seen that there is a constant phase angle between the positions of the 2 pistons. This is something which remains the same no matter which mechanical design is chosen: there should be 90 degree phase angle between the positions of the 2 pistons, all over the cycle. In reality, the positions of these 2 pistons are continuous and usually have a sinusoidal motion, with a 90 degree phase angle.

According to the different design chosen, the disposition of the compression and expansion spaces and of the regenerator may vary. More details on the different layouts can be found in the part of this report on the different designs of Stirling engines.

In a first approach, some simple relations can be found to describe this cycle, making some assumption on the thermodynamics of the gas cycle (isothermal, isochoric processes, no friction, no pressure drop, perfect gas assumption). The complete demonstration of such ideal relations is a classical thermodynamic analysis and can be found in D. Haywood article for example.

The main results of this simple analysis are the following:

$$W = -mR\ln\left(\frac{V_2}{V_1}\right)(T_H - T_L) \qquad \text{and} \qquad Q_L = -mRT_L\ln\left(\frac{V_2}{V_1}\right)$$

W: the work generated by the engine in J
Q_L: the heat input to the engine in J
V_1: minimal volume of the working gas over the cycle in m^3
V_2: maximal volume of the working gas over the cycle in m^3
R: Perfect gas constant specific to the gas selected: R=8.314/M where M is the molar mass of the gas. R is in J/(kg.K)
m: mass of gas in the engine in kg
T_L: Temperature of cold source in K
T_H: Temperature of Hot source in K

The combination of these 2 relations allows getting the ideal efficiency of such cycle:

$$\eta = \frac{-W}{Q_H}$$

η being the thermal efficiency of the engine. This does not take into account any losses linked to the mechanical design or other parameters of the engines. It just characterizes the efficiency of the conversion of the heat transferred to the gas into mechanical work.

The result of this relation is as follow:

$$\eta_{STIRLING} = \frac{T_H - T_L}{T_H} = \eta_{CARNOT}$$

This means that the theoretical efficiency of Stirling cycle machines is as high as the maximal conversion efficiency a thermal machine could get, namely Carnot efficiency. This is one of the main characteristics of Stirling engine why Stirling engine can appear more interesting than other thermal machines.

In reality, a lot of other losses have to be taken into account which takes away the real efficiency from this theoretical efficiency, such as mechanical (friction e.g.), thermodynamic (non isothermal process e.g.) or heat transfer losses. When designing a Stirling engine, the aim is to get as close as possible to the theoretical efficiency by reducing all the possible losses.

3.2 Schmidt analysis: a more realistic model

The previous analysis gave a simple way to calculate the work ideally done by the engine over the Stirling cycle in the case of ideal Stirling cycle. It is easy to understand that such method alone can not be used once one want to design an elaborated power generating engine. Then a more complex method has to be used to define the main design parameters.

One of the standard methods used when dealing with Stirling engine design is the Schmidt analysis method. This method published in 1871 by Gustav Schmidt, then working at the German polytechnic institute of Prague, was the first attempt to give a mathematical analysis of the Stirling cycle (see Prof. Urieli website).

This method is base on 2 main assumptions:

- Ideal isothermal model (constant temperature of compression and expansion spaces over the cycle)
- Sinusoidal motion of the pistons during the cycle

Since the aim of this report is not to get in depth knowledge of all the mathematical analyses of Stirling cycle, the demonstration of such method will not be presented here, but the reader can found 2 alternatives descriptions of this method on Prof. Israel Urieli website and Dr. Siegfried Herzog Website.

The advantage of this method is that it proposes a closed solution of the equation system describing the Stirling cycle. The main result of this method concerns the work generated by the engine.

$$W = Wc + We$$

With

$$Wc = \pi\ Vswc\ p_{mean}\ \sin\beta\ (\sqrt{1-b^2} - 1)/b$$

$$We = \pi\ Vswe\ p_{mean}\ \sin(\beta - \alpha)\ (\sqrt{1-b^2} - 1)/b$$

And

$$b = c\ /\ s$$

$$s = \left[\frac{Vswc}{2\ Tk} + \frac{Vclc}{Tk} + \frac{Vk}{Tk} + \frac{Vr\ \ln(Th/Tk)}{(Th - Tk)} + \frac{Vh}{Th} + \frac{Vswe}{2\ Th} + \frac{Vcle}{Te}\right]$$

$$\beta = \tan^{-1}\left(\frac{Vswe\ \sin\alpha / Th}{Vswe\ \cos\alpha / Th + Vswc / Tk}\right)$$

$$c = \frac{1}{2}\sqrt{\left(\frac{Vswe}{Th}\right)^2 + 2\frac{Vswe}{Th}\frac{Vswc}{Tk}\cos\alpha + \left(\frac{Vswc}{Tk}\right)^2}$$

W: indicated energy output of the engine over a cycle in J
Wc: indicated energy output of the compression space over a cycle in J
We: indicated energy output of the expansion space over a cycle in J
Vswc: swept volume of compression space in m^3
Vswe: swept volume of expansion space in m^3
Vr: volume of regenerator space in m^3
Vk: Cooling space volume in m^3
Vh: heating space volume in m^3
Pmean: mean gas pressure over the cycle in Pa

α: phase angle between the position of the 2 pistons
Vclc: clearance volume of compression space (dead volume) in m^3
Vcle: clearance volume of expansion space (dead volume) in m^3
Th: heating space temperature in K
Tk: cooling space temperature in K
Te: expansion space temperature in K

To get the corresponding powers, one has to multiply the energy output by the frequency of the engine (number of cycle per seconds).

The definition of each of these input parameters may vary according to the engine design chosen. More details on the application of this method for the different designs can be found in Dr.. K. Hirata website. One of the main criticisms done about this analysis is that the results are not realistic since they imply that all heat exchangers of the engine are redundant (see prof. Urieli website). Thus some alternatives to this method have been proposed, but not always proposing closed form solution for the equation system describing the cycle (ideal adiabatic model e.g.). Anyway, this method is often used as a basis to model Stirling cycle in particular cases for practical applications, as can be seen in B. Kongtragool (2004) for example.

The following figure represents the Clapeyron diagram of an example of Stirling cycle model using Schmidt analysis method. This example comes from Dr. K. Hirata academic website.

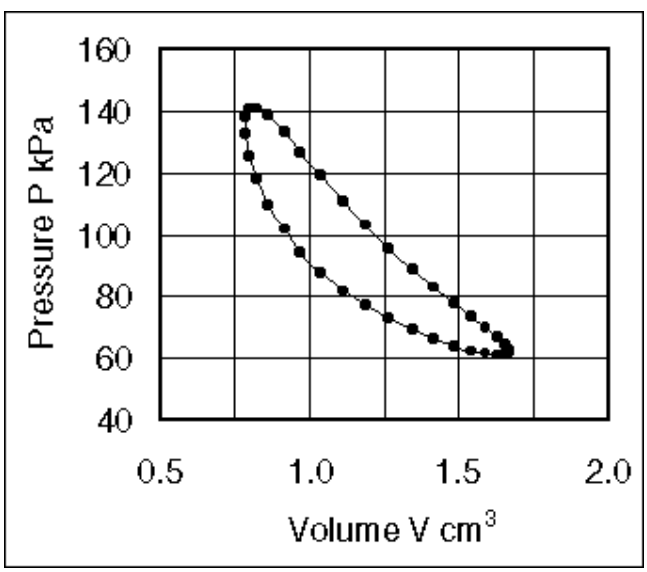

Figure 3.5: Example of Stirling engine cycle model using Schmidt analysis method (from Dr. K. Hirata website)

The input parameters to get this model can be found in appendix 2. From this figure, it can be seen than despite all the drawbacks of this method, it can gives more realistic results and a closed form solution.

3.3 Advantages and disadvantages of Stirling engine

To understand the interest in Stirling engine all over the time, it is important to know its different advantages, especially compared to other machines such as I.C. engines for example. In the same way, to understand the different disinterest and barrier to Stirling engine development over time, it is interesting to have a look at its drawbacks.

3.3.1 Advantages

At the moment, this kind of engine still has lower efficiencies, around 30% (M.E. Corria, 2005), than usual I.C. engines, around 45 to 48 % (T. Stehende, 2009). In spite of that, as seen in the previous part, the Stirling engine is a thermal machine which theoretical efficiency is the highest possible, namely Carnot efficiency. This should make possible, by developing the engine enough, to reach at least as high real efficiencies as for I.C. engine for example. This potential efficiency improvement makes it interesting to investigate and develop.

Another advantage of Stirling engine which can explain the renewed interest for further development is the fact that such engine can accept a large array of different heat sources. Since the fuel has not to be put inside the engine, it is possible to design a Stirling engine to work on any classical fuel (diesel, gasoline, natural gas, coal), biofuels (biogas, ethanol,…) or biomass and even solar energy. Moreover, this kind of engine can be designed to run on different temperature of heat source which allows for example to use such engine to generate power from waste heat.
In the case of fuel combustion heat source, the fact that the heating is continuous, contrary to I.C. engine where combustion of the fuel is done through a cyclic sequence, improve combustion efficiency and limits hazardous emissions (CO2, NOx, CO) (B. Kongtragool, 2002). So even if the only heat source involves combustion of a fuel, Stirling engine remains in theory less harmful for environment than I.C. engine. Moreover, since in this case, the combustion is done without any explosion, this engine is much more silent than usual I.C. engines. This explains the interest of some companies for this engine for particular applications (military submarines e.g.).

Another advantage of such an engine is that because it can be designed with very few moving parts or mechanically stressed parts (exposed to explosion e.g.), it is more reliable than I.C. engines and thus requires less maintenance (Walker, 1973).

3.3.2 Drawbacks

One of the main disadvantages of Stirling engine which explains why the idea has often been forgotten and I.C. engines preferred is that such engine as quite a low specific power (ratio power versus volume swept by the piston) compared to I.C. engine (R. Senft, 1993). This is for example one of the reason why the attempts to use Stirling engine for automobile motorization have not succeeded yet.

Another disadvantage of Stirling engine is that it needs a certain warming up time before really starting to generate power. This is the other major reason why the attempts to use Stirling engine for automobile motorization have not succeeded yet.

Because of the continuous heating the temperature of the hot part of the engine can be problematic and this part may require being build with special heat resistant material. In an internal combustion engine, even though some high temperature can be reached punctually, since heating is not continuous, the average engine temperature is lower (Walker, 1973).

This engine is harder to scale up because of the limitation of heat transfer area between the heat source and the working gas. Indeed, if the engine is too large, the heat transfer to the working gas will needed too big areas to be efficient. (Walker, 1973).

The fact that the technology is not as mature as I.C. engines, not as widely commercialized yet, and because of different design parameters (heat exchangers, choice of working gas, pressurization,…), the cost of Stirling engine, around 1125 to 3000 $/kW (M.E. Corria, 2005), is higher than I.C. engines, around 900 to 1300 $/kW (T. Stehende, 2009).

3.3.3 Summary

Following table sums up some main advantages and disadvantages of Stirling engines in comparison to internal combustion engines.

Characteristics	Stirling engine	I.C. engine
efficiency	Highest theoretical efficiency	Higher efficiency at the moment
emission	Much lower emissions or no emission at all	Higher emissions, depending on the fuel used
Fuel	Large fuel flexibility (good opportunities for renewable energies)	Special fuel requirements for a given engine
Noise	Silent	Noisy, need noise reduction equipment
Power	Hard to scale up, lower specific power	Large power range available, high specific power
Cost and commercialisation	Higher investment cost, commercialization just started	Cheaper, widely commercialized for different applications
Level of understanding and technology development	scattered development through time	Mature technology

Table 3.1: Summary of main advantages and disadvantages of Stirling engines in comparison to internal combustion engine

4 MECHANICAL DESIGNS

This part presents the different possible mechanical designs usually used to build Stirling engines. The first part presents a non exhaustive list of the main design and the second part compares the 4 main designs.

4.1 Technology tree

Several alternatives exist concerning Stirling engine design. All these designs are following the same thermodynamic cycle, the difference between each being mainly mechanical. The following chart sums up the different existing designs of Stirling engines. It does not give an exhaustive list of designs but an overview of the main designs and the relation between each other.

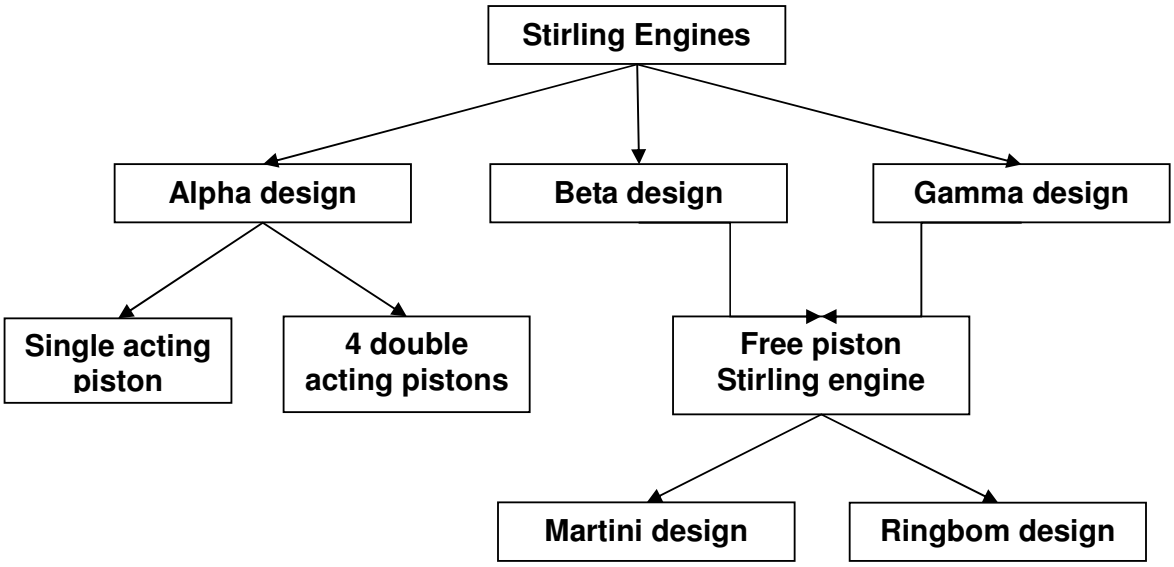

Figure 4.1: Stirling engine technology tree

4.1.1 Alpha design

The alpha design is characterized by the fact that the expansion and compression spaces are in 2 different cylinders as can be seen on the following figure.

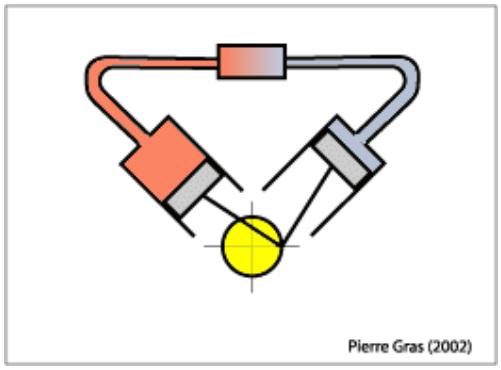

Figure 4.2: Alpha design

This configuration corresponds to a single acting piston configuration: one of the piston is the compression piston (cold side in blue) compressing the gas and pushing it in the hot side during the cycle and the other one is the expansion piston (hot side in red) which generates work during the expansion part of the cycle (T. Finkelstein, A. J. Organ, 2001).

The 4 double acting piston design comes directly from this simple single acting piston design. In this case, the expansion space of a cylinder is connected, via a pipe with a regenerator to the compression space of the following cylinder. Usually this is done with 4 cylinders, which makes easier to control the position of the pistons in their cycle compared to the other pistons (using a swash plate for mechanical linking of the pistons for example), but it is possible to use it in the same way with a different number of pistons (T. Finkelstein, A. J. Organ, 2001).

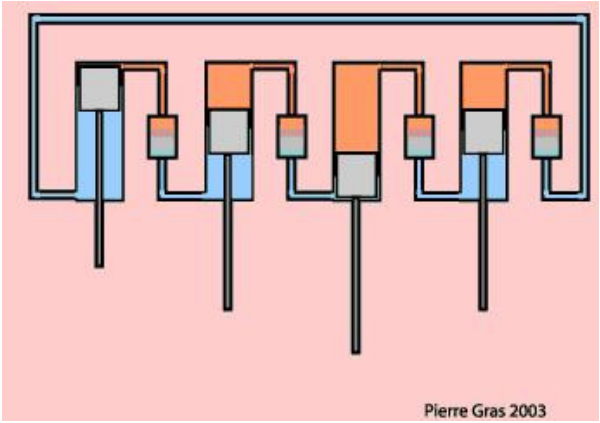

Figure 4.3: 4 interconnected double acting pistons design

4.1.2 Beta design:

In this design,2 pistons are in a same cylinder: the displacer piston (in light gray in the figure) which is not sealed and makes the gas circulate in the cylinder between compression and expansion space of the engine and the power piston (in dark gray in the picture) which is sealed and which generates the work during the cycle.

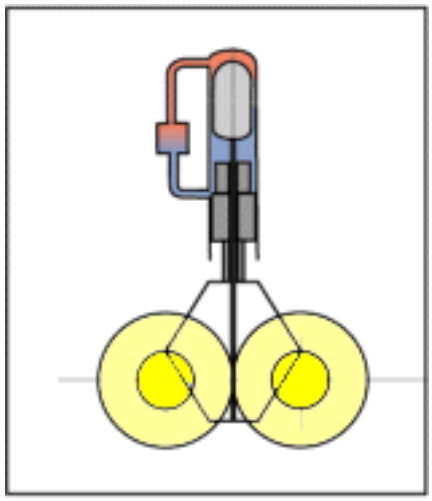

Figure 4.4: Beta design

4.1.3 Gamma

For this design as for Beta design, there is a displacer and a power piston but in this particular case, the 2 pistons are in different cylinders as can be seen on following figure.

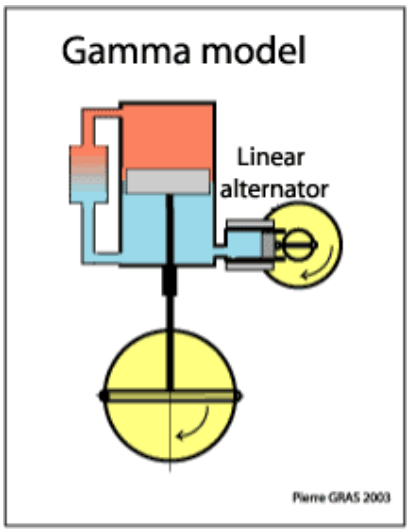

Figure 4.5: Gamma design

In this figure, the power generation is done using a linear alternator, the power piston being or containing a permanent magnet which creates a magnetic field. In some other cases, the power is generated by connecting an alternator (rotating) to the power piston wheel. In this case the power piston does not have to create a magnetic field.

4.1.4 Free piston Stirling engine

This kind of design is similar to Beta or more Gamma design. The main difference is that one of the pistons or both of them are not linked to any mechanical systems (crankshaft, manifold,…). There are different alternative to build such engines, each corresponding to a sub-category of engine.

The first one is the Ringbom engine. In this case, the displacer is not linked to any mechanical system. Its movement in the cylinder is controlled by a gas ("bounce gas") which makes it move back acting like a spring during the different phases of the cycle (J. R. Senft, 1993). As for the previous design, power generation can be done using a linear or rotating alternator.

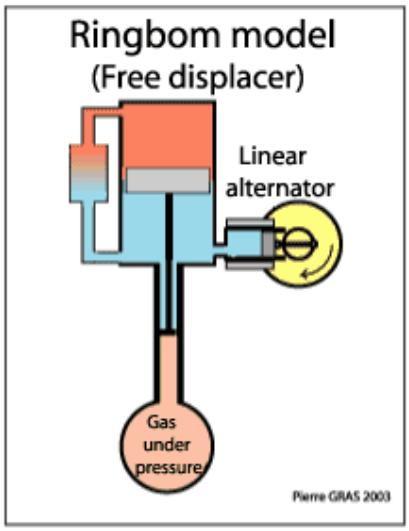

Figure 4.6: Ringbom design

The second one is the Martini design. As for the Ringbom, one of the pistons motion is controlled by a gas which acts like a spring during the different steps of the cycle. The difference being that in this case, it is the power piston which is not connected mechanically.

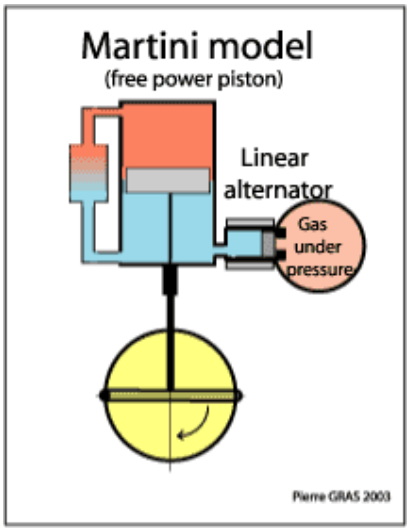

Figure 4.7: Martini design

The third alternative is the Free piston Stirling engine (FPSE) design for which both of the pistons are not connected to any mechanical system.

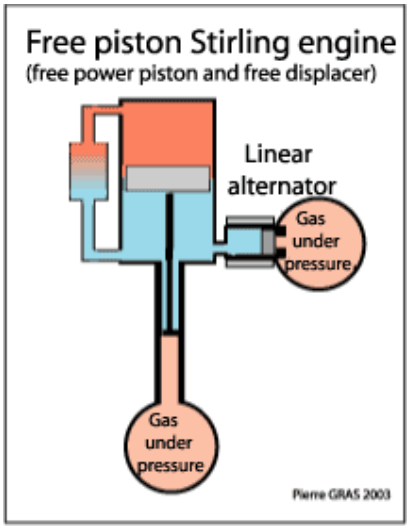

Figure 4.8: FPSE design

For the free piston systems for which there is no mechanical device connected to the power piston, the extraction of power is usually done using a linear alternator, to generate electricity, the power piston being or containing a magnet generating a magnetic field. For all these free piston designs, the correct sequence of the cycle is insured by sizing and choosing carefully the different elements of the engine.

More details on the different kind of Stirling engine designs can be found in G. Walker book (G. Walker, 1973) and Theodore Finkelstein and Alan J. Organ book (T. Finkelstein, A. J. Organ, 2001).

4.2 Comparison of the main designs

Among the designs presented in previous part, there are 4 main mechanical designs (according to how often they are used for commercial applications) to consider when it comes to Stirling engine conception:

- Alpha design
- Beta design
- Gamma design
- Free Piston Stirling Engine (FPSE) design

As seen in the History part, these designs were not invented at the same time and they present different characteristics which make them more suitable for given applications, manufacturing possibilities and working conditions. Following table sums up the advantages and drawbacks of these different designs.

Design	Advantages	Disadvantages
Alpha	- Simplest mechanical configuration (J. R. Senft, 1993) - The interconnected double acting piston design allows more compact design and higher specific power (D. G. Thombare, 2006)	- Both pistons must be sealed in order to generate work and keep the fluid inside the engine. This represents a big disadvantage when it comes to scaling up of the engine and its production (G. Walker, 1973). - For larger size of engine, the weight of the systems can quickly become problematic (G. Walker, 1973).
Beta	- More compact design. Overlaps of pistons strokes allow better use of volume. Reduced weight (G. Walker, 1973). - Only one piston has to be sealed (Prof. Urieli website).	- More complex design, especially when it comes to the connection between displacer rod and power piston (T. Finkelstein, A. J. Organ, 2001). - Therefore More expensive design (T. Finkelstein, A. J. Organ, 2001).
Gamma	- Same thermodynamic advantage as Beta design but with a simpler construction which makes it less expensive (T. Finkelstein, A. J. Organ, 2001). - Can run on low temperature difference (Prof. Urieli website).	- Larger dead volume which reduce efficiency and specific power (power over swept volume ratio) (T. Finkelstein, A. J. Organ, 2001).
FPSE	- No cinematic mechanism which reduce mechanical losses and allows the engine to be hermetically sealed (possibility to pressurize the gas) (G. Walker, 1973). - Self starting (G. Walker, 1973). - Higher output if working gas is pressurized (G. Walker, 1973).	- More complex design (for example the pressure of the different gas have to be set accurately enough to ensure proper operations of the system)

Table 4.1: Comparison of main Stirling engine designs

4.3 Main design parameters

According to literature and what can be found concerning commercial applications and development of Stirling engine (see the part of this report dedicated to manufacturers of Stirling engines), it seems that efficiency difference is not the main criteria of choice between 2 different designs. The choice of a design compared to another seems to be done more according to the power output, the input requirements (heat source, temperature ratio, pressurization,…), the mechanical design and costs of a given type (D. G. Thombare, 2006).

As can be seen in the part on Stirling engine theory (Beale Formula and Schmidt analysis), there are some main parameters to take into account when designing and sizing a Stirling engine:

- Mean pressure over the cycle
- Rated speed (frequency)
- Piston strokes and swept volume ratio between displacer and power piston
- Heat source to heat sink temperature ratio
- Phase angle between power and displacer piston

By acting on these parameters, it is possible to change the output power and speed of the engine. For example, pressurizing the working volume of a Stirling engine allows increasing the power output from a given engine. Concerning speed variation of Stirling engine, different techniques are used according to which mechanical design is used (change of stroke, phase angle variation,…) (D. G. Thombare, 2006).

5 MARKET AND MANUFACTURERS

This part presents today's main applications of Stirling engine and some important facts about the main manufacturers of Stirling engines for these different applications.

5.1 Main applications

Historically, as can be seen in the part of this report about Stirling engine development History, the Stirling engine was first designed for mechanical power generation application. Depending on the technology new developments and needs of the time period, new applications appeared for this engine.

Today, Stirling engines are intended mainly for 2 applications:

- Electric power generation
- Micro Combined Heat and Power generation (micro CHP)

Following figure shows the distribution of main applications

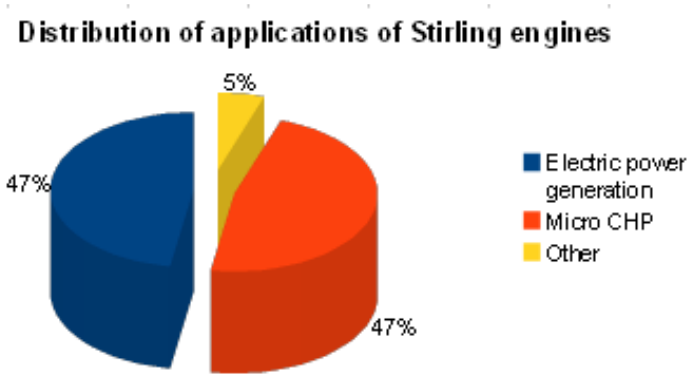

Figure 5.1: Stirling engine applications distribution

From this figure, corresponding to 19 different manufacturers, it can be seen that Power generation and Micro CHP represent the main parts of the applications and are equally distributed. The remaining 5% corresponds to a manufacturer which produces engines for Submarine propulsion (Kockums, see Appendix 1).

5.1.1 Electric power generation

The use of Stirling engine for power generation has been strongly motivated by its ability of using almost any kind of heat source for heat input, especially renewable energies. In this way, manufacturers proposes different engine models, some driven by concentrated solar energy or fuel combustion and even waste heat since Stirling engine can be designed to work on low temperature difference. Concentrated solar power (CSP) is the preferred heat source for power generation. In this case, a circular parabolic solar concentrator concentrates sun rays on the heating side of the Stirling engine, placed at the focal point of the concentrator. Such combination of solar energy and Stirling engine can be found on broad power generation scale, usually from 1 kWe to 25 kWe. Following figure shows an example of such a system.

Figure 5.2: Solar dish/Stirling engine system (from PSA website)

Some manufacturers propose Stirling engine systems for power generation as low as 42 We and some projected products aim at power generation as high as 2MWe (see appendix 1 for more details).

5.1.2 Micro CHP

As for power generation, the ability of Stirling engine to run on different heat source and especially renewable energy sources made it interesting for CHP applications. However, the difficulty to design large scale Stirling engine made it more attractive for smaller scale application, namely micro CHP applications. In most of the cases, such micro CHP unit are powered by the combustion of a given fuel (natural gas, biomass, biogas). Following figure shows an example of WhisperGen Micro CHP unit (see appendix 1 for more details).

Figure 5.3: Micro CHP unit (from WhisperGen website)

Stirling engine allows in the case of Micro CHP to get unit large enough to supply an individual home, still keeping a total efficiency around 90% as larger CHP plants theoretically do. This allows using decentralized CHP at lower investment cost than usual larger scale plant. For this kind of application the power ranges from 800 We and 5.5 kWth to 35 kWe and 140 kWth (see appendix 1 for more details).

5.1.3 Other applications

Some other applications have been found for Stirling engine through time but one of the most important is the application for transportation. As explained in the part about History of Stirling engine development, in the 70's some company tried to adapt Stirling engine for automobiles, but the warming/cooling time and speed control problems of Stirling engine and some other drawbacks stopped the development of such applications.

Today, a Swedish company, Kockums A.B. (www.kockums.se), continues to develop Stirling engine for motorization of military submarines, because of the silent operation of such engines which is critical for submarines.

5.2 Market overview

In this part, a list of 20 manufacturers of Stirling engine for commercial application is presented. This list is as exhaustive as possible and try to show an overview of the technology used, their characteristics and the kind of applications they are made for. The table in appendix A summarizes the main Stirling engine manufacturers and the characteristics of their products. All the data come directly form the manufacturers' websites. Some of these products are already commercially available, some are still under development, which explains the difference of availability and accuracy of the data.

Following charts summarize main data about Stirling engine manufacturers and technologies

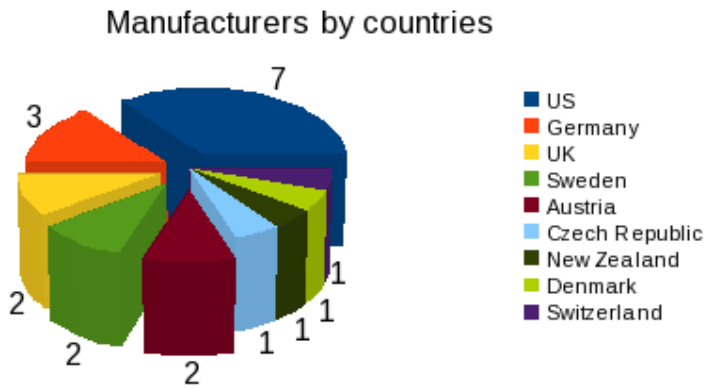

Figure 5.4: Stirling engine manufacturers geographic distribution

From the 20 manufacturers of Stirling engine found, the 2 countries most represented are the US and Germany.

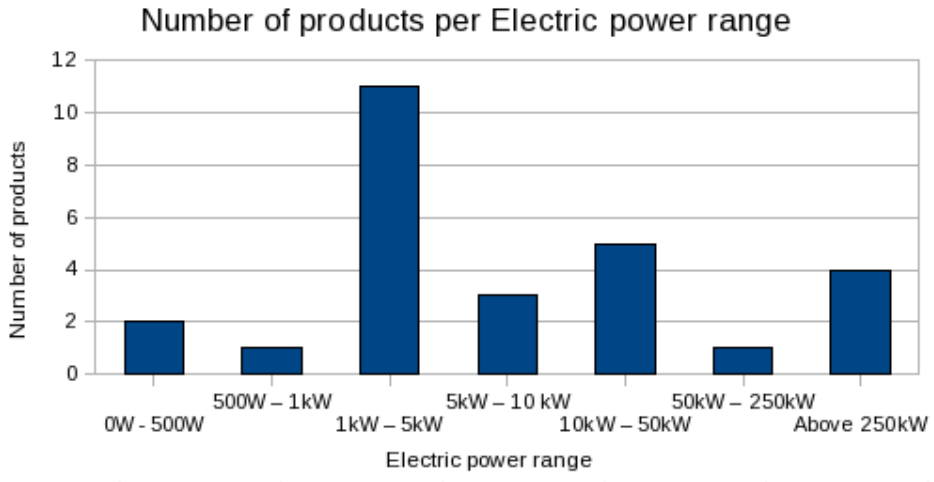

Figure 5.5: Commercially available Stirling engine distribution by power output range

27 different products have been found, produced by different manufacturers. It appears that the main design electric powers are in the range of 1 to 5kW electric.

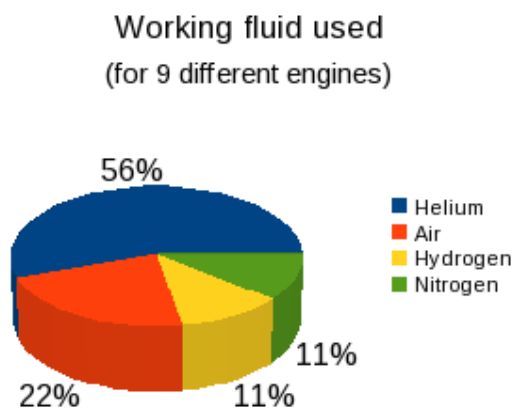

Figure 5.6: Working fluid used in commercially available Stirling engines

For the engines for which data on the working fluid were available, it appears that Helium is the working fluid used most of the time.

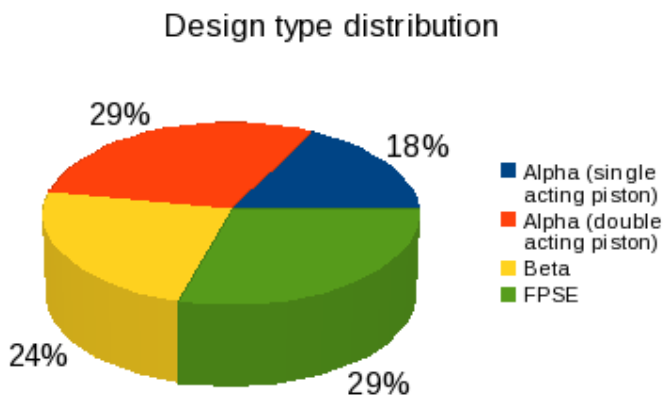

Figure 5.7: Design used for commercially available Stirling engines

Concerning the type of design of the Stirling engine, among the Stirling engine for which data were available, Free piston Stirling engine (FPSE) and alpha double acting pistons designs seems to be more represented, quickly followed by the other major designs. It can be noticed that none of the industrial Stirling engine found is built following the Gamma design, probably because of its lower efficiency.

6 REFERENCES

Articles

Bancha Kongtragool, Somchai Wongwises (2002); *A review of solar-powered Stirling engines and low temperature differential Stirling engines*; Elsevier science-direct; available at www.sciencedirect.com

Bancha Kongtragool, Somchai Wongwises (2004); *Investigationon power output of the gamma configuration low temperature differential Stirling engines*; Elsevier science-direct; available at www.sciencedirect.com

David Haywood, *An introduction to Stirling cycle machines*, Stirling cycle research group, department of mechanical engineering, University of Canterbury

D. G. Thombare, S.K. Verma (2006); *Technological development in the Stirling cycle engines*; Elsevier science-direct; available at www.sciencedirect.com

Maria Eugenia Corria, Vladimir Melian Cobas, Electo Silva Lora (2005); *Perspectives of Stirling engines use for distributed generation in Brazil*; Departement of mechanical engineering, Federal university of Itajuba, Brazil; Elsevier science-direct; available at www.sciencedirect.com

Lecture notes

Thomas Stenhede (2009); *Internal combustion engines*; Lecture notes from “applied heat and power technology” course, Sustainable energy engineering MSc program, Kungliga Tekniska Hogskolan (royal institute of technology), Stockholm, Sweden.

Books

Theodore Finkelstein, Allan J. Organ (2001); *Air engines: the History, science, and reality of the perfect engine*; New York: ASME Press ; Bury St. Edmonds, Suffolk, UK : Published in the U.K. by Professional Engineering Publishers; I*SBN* 0791801713, *ISBN* 9780791801710

James R. Senft (1993); *Ringbom Stirling engine*; New York : Oxford University Press; *ISBN* 0195077989*, ISBN* 9780195077988.

Robert Sier (2000); *Hot air caloric and Stirling engines, volume one: a History*; L.A Mair, UK; ISBN 0 9526417 1 2

G. Walker (1973); *Stirling-cycle machines*; Clarendon press – Oxford; Oxford University press; OCLC number 26463852

Websites

Stirling engine society of USA website, www.sesusa.org as accessed on June 8th 2009

MIT website on Stirling engine, web.mit.edu/2.670/www/Stirl/stirl.html as accessed on June 8th 2009

Kockums AB website, a Swedish company producing Stirling engines for Submarine drive, www.kockums.se as accessed on June 9th 2009.

Pierre Gras website, private website with explanations on the different type of Stirling engine designs, www.stirlingengine.fr as accessed on June 15th 2009

Professor Israel Urieli website, professor at the department of mechanical engineering of the university of Ohio, lecture notes from "Stirling cycle machines" course, www.ent.ohiou.edu/~urieli/ as accessed on June 15th 2009.

PSA (Plataforma Solar de Almeria) website, Solar dish/Stirling engine project, www.psa.es as accessed July 16th 2009.

Doctor Siegfried Herzog website, assistant professor of mechanical engineering at the Penn State university at Monte Alto, Mathematical analysis of Stirling engine, mac6.ma.psu.edu as accessed on June 15th 2009

World alliance for decentralized energy (WADE), www.localpower.org as accessed June 20th 2009.

Dr Koichi Hirata website; details on the Schmidt analysis method, www.bekkoame.ne.jp/~khirata/academic/schmidt/schmidt.htm; as accessed June 20th 2009.

7 APPENDIX 1: STIRLING ENGINE MANUFACTURERS AND TECHNOLOGIES

Name of the company (country)	Application	Stirling engine design	Efficiency *	Power*	Working fluid used	Pressure	Hot source temperature	Status **	Website
TEDOM (Czech Republic)	Power generation and CHP (from fuel combustion and solar dish)	Alpha (single acting piston)	24.13%e	7.4 kWe	Helium	10Mpa (1450 psi)	160C (320F)	U. D.	Engine.stirling.cz
Stirling biopower formerly STM (US)	CHP (from fuel combustion)	Alpha (4 interco-nnected double acting pistons)	27%e - 48%th - 75-80%T	43 kWe - 77 kWth - 120 kWT	-	-	-	C. A,	www.stirlingbiopower.com
SES - Stirling energy system (US)	Power generation (solar dish)	Alpha (4 interco-nnected double acting pistons)	31.25%e	25 kWe	-	-	-	U. D.	www.stirlingenergy.com
Kockums AB, formerly United Stirling AB (Sweden)	Marine propulsion and power generation (solar dish in partnership with SES)	-	31%m	75 kWm	-	-	-	C. A,	www.kockums.se
Sunpower (US)	Power generation (solar dish)	FPSE	1) 32%e 2) 36%e 3) 32%e	1) 42 We 2) 95 We 3) 1 kWe	-	-	-	C. A,	www.sunpower.com
Infinia (US)	Power generation and CHP (in partnership with Enatec and Rinnai)	FPSE	24%e	3 kWe	-	-	-	C. A,	www.infiniacorp.com
ReGen Power system (US)	Power generation (waste heat or fuel combustion)	FPSE	1) 13%e 2) 25%e	1) 250 kWe - 1 MWe 2) 500 kWe - 2 MWe	-	-	1) 100C (212F) 2) 250C (482F)	U. D.	www.rgpsystems.com
Stirling DK (Denmark)	CHP (from fuel combustion)	Alpha (4 interco-nnected double acting pistons)	18%e - 88%T	35 kWe - 140 kWth	Helium	4.5 MPa (653 psi)	-	C. A,	www.sd.econtent.dk
Cleanenergy AB (Sweden)	Power generation (solar dish)	-	-	9 kWe	-	-	-	C. A,	www.cleanergyindustries.com
Stirling Systems AG (Switzerland)	1) Micro-CHP (from fuel combustion)	1) FPSE 2) Alpha	1) 18%e - 90%T 2) 23%e	1) 1.2 kWe - 5 kWth 2) 2 to 9.5	1) Helium 2)	1) 3.5 MPa (508 psi)	1) 650C (1202F) 2) 650C	1) C. A, 2) U.	www.stirling-systems.com

	2) Power generation (solar dish)			kWe	Hydrogen	2) 2 to 15 Mpa (290 to 2175 psi)	(1202F)	D.	
WhisperGen (New Zealand)	Micro-CHP (from fuel combustion)	Alpha (4 interco-nnected double acting pistons)	11%e - 90%T	800 We - 5.5 kWth	-	-	-	C. A,	www.whispergen.com
Enerlyt GmBH (Germany)	Micro-CHP (from fuel combustion)	Beta	20%m	1 kWe - 3.5 kWth	-	1 Mpa (145 psi)	766C (1410F)	U. D.	www.enerlyt.de
SunMachine (Germany)	Power generation and CHP (from fuel combustion and solar dish)	Alpha (single acting piston)	20%e - 90%T	3 kWe - 10.5 kWth	Nitrogen	4 Mpa (580 psi)	-	C. A,	www.sunmachine.com
DISENCO ltd. (UK)	Micro-CHP (from fuel combustion)	Beta	20%e - 90%T	3 kWe - 15 kWth	Helium	-	-	C. A,	www.disenco.com
SPM (Germany)	Micro-CHP (from fuel combustion)	Alpha (4 interco-nnected double acting pistons)	-	1 kWe	Air	-	-	U. D.	www.stirlingpowermodule.com
ADI (US)	Power generation and CHP (from fuel combustion)	Beta	30%e	25 kWe	-	-	1150C (2100F)	U. D.	www.adithermalpower.com
Stirling Engineering (Austria)	Micro-CHP (from fuel combustion)	Beta	40%e - 90%T	8 kWe - 21 kWth	Helium	1.65MPa (240 psi)	700C (1292F)	U. D.	Www.stirling-engineering.com
BSR solar technology (Germany)	Water pumping and power generation (solar)	FPSE	1) 13%m 2) 36%m	-	-	1) 1 Mpa (145 psi) 2) 1 MPa (145 psi)	1) 100C (212F) 2) 500C (932F)	U. D.	www.bsrsolar.com
BAXI (UK)	Micro-CHP (from fuel combustion)	FPSE	15%e - 92%T	1.1 kWe - 6kWth	-	-	525C (977F)	C. A,	www.baxi.co.uk
Stirling Technology Inc, spin off of Sunpower (US)	Micro-CHP (from fuel combustion)	Beta	10%m - 80%T	3.7 kWm	air	0.5 MPa (73 psi)	650C (1202F)	C. A,	www.stirling-tech.com

**Note: concerning efficiencies and power, the letters "e", "m", "th" and "T" in index refers respectively to electrical, mechanical, thermal and total.*

***Note: C. A. stands for "commercially available". U. D. stands for "under development".*

8 APPENDIX 2: EXAMPLE OF APPLICATION OF SCHMIDT ANALYSIS METHOD (FROM DR. K. HIRATA WEBSITE)

Input parameters:

Engine type: alpha
Swept volume of an expansion piston: Vswe=0.628 cm^3
Swept volume of a compression piston: Vswc=0.628 cm^3
Dead volume of the expansion space: Vcle=0.2cm^3
Dead volume of the compression space: Vclc=0.2cm^3
Regenerator volume: Vr=0.2cm^3
Phase angle: α=90deg
Mean pressure: Pmean=101.3 kPa
Expansion gas temperature: Te=400degC
Compression gas temperature: Tc=30degC
Engine speed: N=2000 rpm.